GABION FENCE – SINGLE GABION INSTALLATION GUIDE

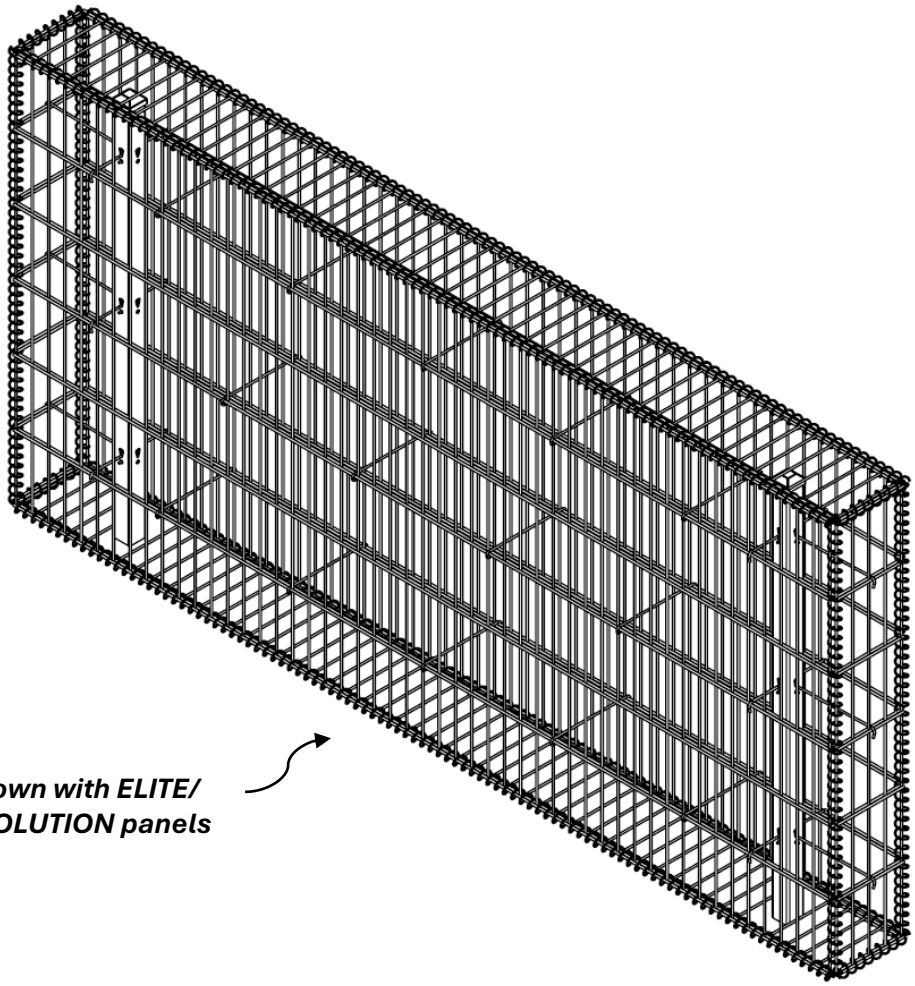

Shown with ELITE/ EVOLUTION panels

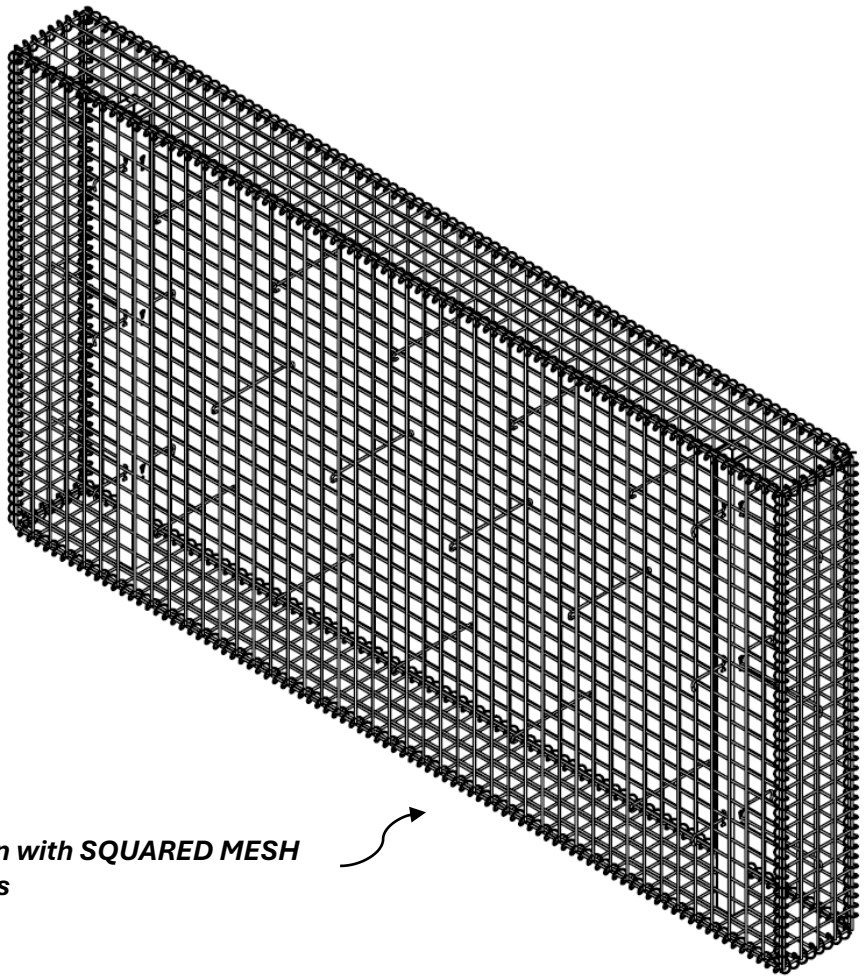

Shown with SQUARED MESH panels

1 GABION FENCE KIT - INCLUDED ITEMS

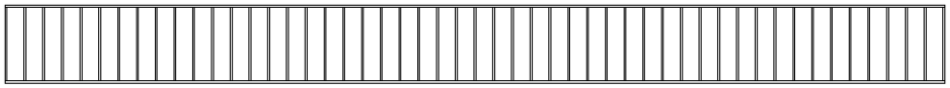

Top panel

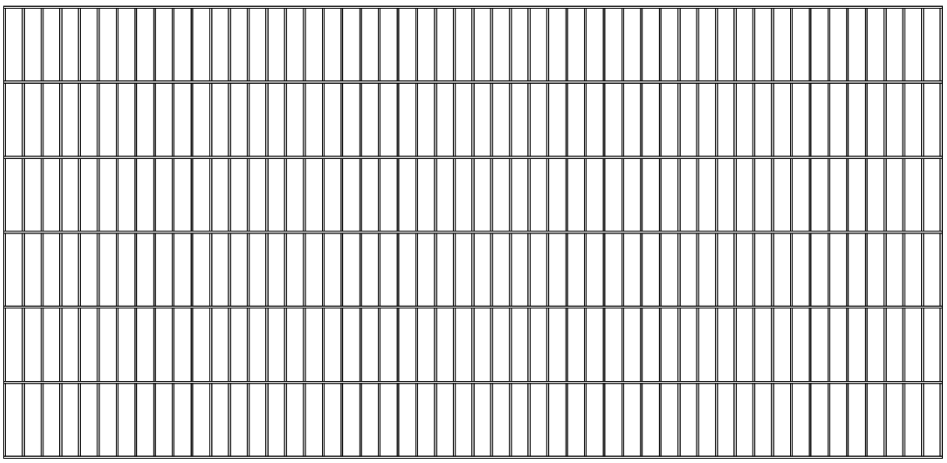

(2x) Front & back panels



(2x) Side panels



Bottom panel

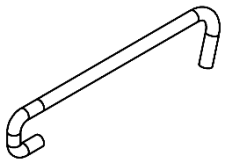

4'' Hooks

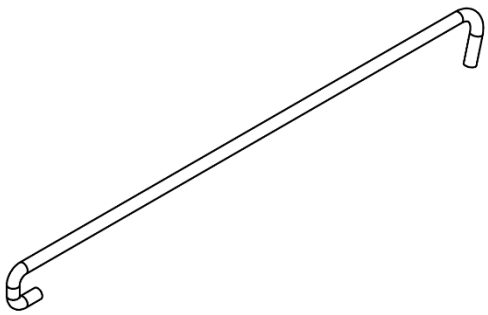

9'' Hooks



Spindles



(2x) Posts

Items quantities table

Gabion fence height	Product number	Gabion spindle (C-GSPINDLESS) quantity	4" hooks kit (C-GHK2PK9SS) quantity	9" hooks kit (C-GHKPPK9SS) quantity
4'	C-GFEL48K**XX** C-GFSQ48K**XX**	7	2	3
6'	C-GFEL72K**XX** C-GFSQ72K**XX**	8	3	4
8'	C-GFEL96K**XX** C-GFSQ96K**XX**	9	3	5

XX	Finish
BK	Black
SP	Special color
GV	Galvanized (EVOLUTION only)

2 POSTS INSTALLATION

2.1 Distance between posts

The distance between the posts, measured from center to center, should be:

- **79 ⅝’’** ± ¼” (**2022 mm** ± 6 mm) for gabion fence with ELITE/EVOLUTION panels
- **70 ½’’** ± ¼” (**1791 mm** ± 6 mm) for gabion fence with SQUARE MESH panels

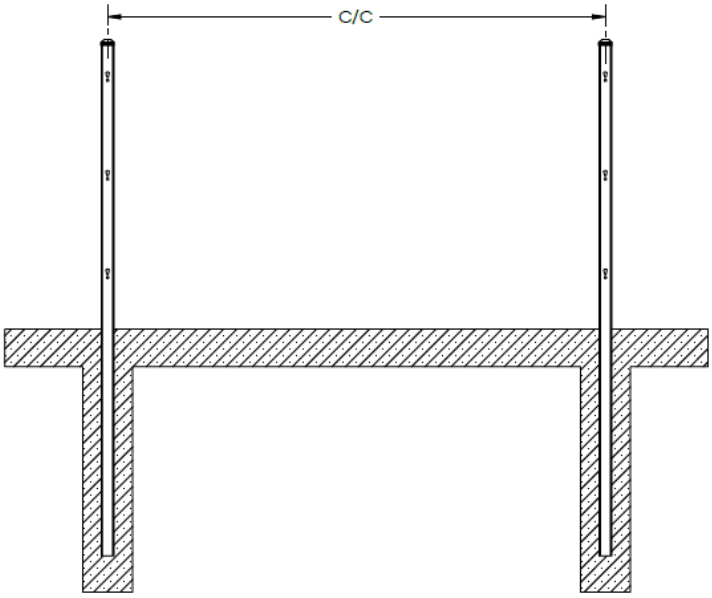

How to calculate the center to center for a non-standard width gabion fence:

Use the following formula to determine the center-to-center (C-C) distance between posts:

C-C = Gabion fence width – 2 × (9” hook length) – 2 × (post width ÷ 2)

Example:
Gabion fence width = 51"
C-C = 51 – 2 × (9$\frac{11}{32}$”) – 2 × (2 ÷ 2) = **30 5/16"**

2.2 Posts installation in concrete

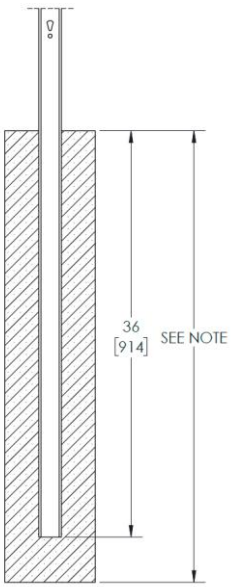

Posts must be embedded at a minimum depth of **3 feet (914 mm).**

NOTE:
The depth of the concrete foundations must comply with the regulations in effect in the region where the installation is performed. A **minimum depth of 42 in. (1070 mm)** is recommended. The recommended foundation diameter is **8 in. (200 mm)** for a commercial site and **6 in. (152 mm)** for a residential installation.

3 MARKING THE CONCRETE ZONE

3.1 Preparing the zone for post embedment

The concrete zone should cover the entire base of the gabion, with an additional **6 inches (152 mm)** on each side. This ensures structural stability and proper load distribution.

3.2 ELITE/EVOLUTION gabion fence

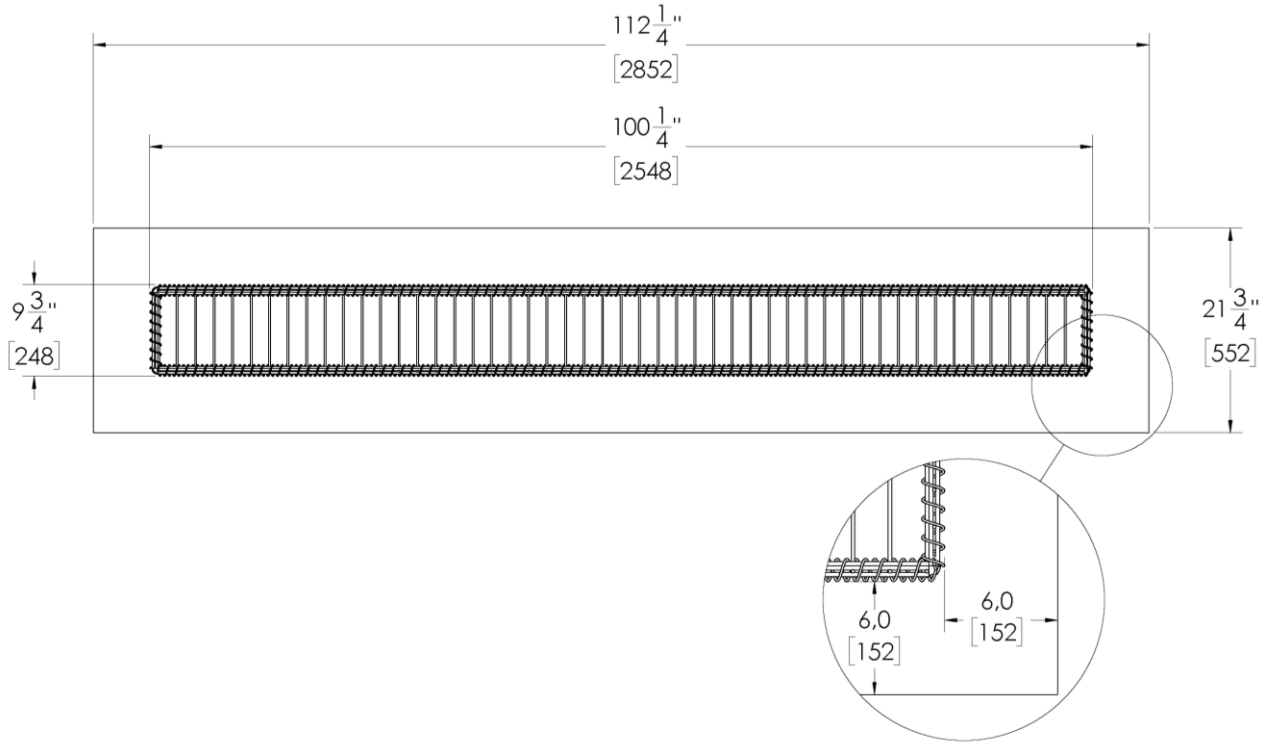

3.3 SQUARE MESH gabion fence

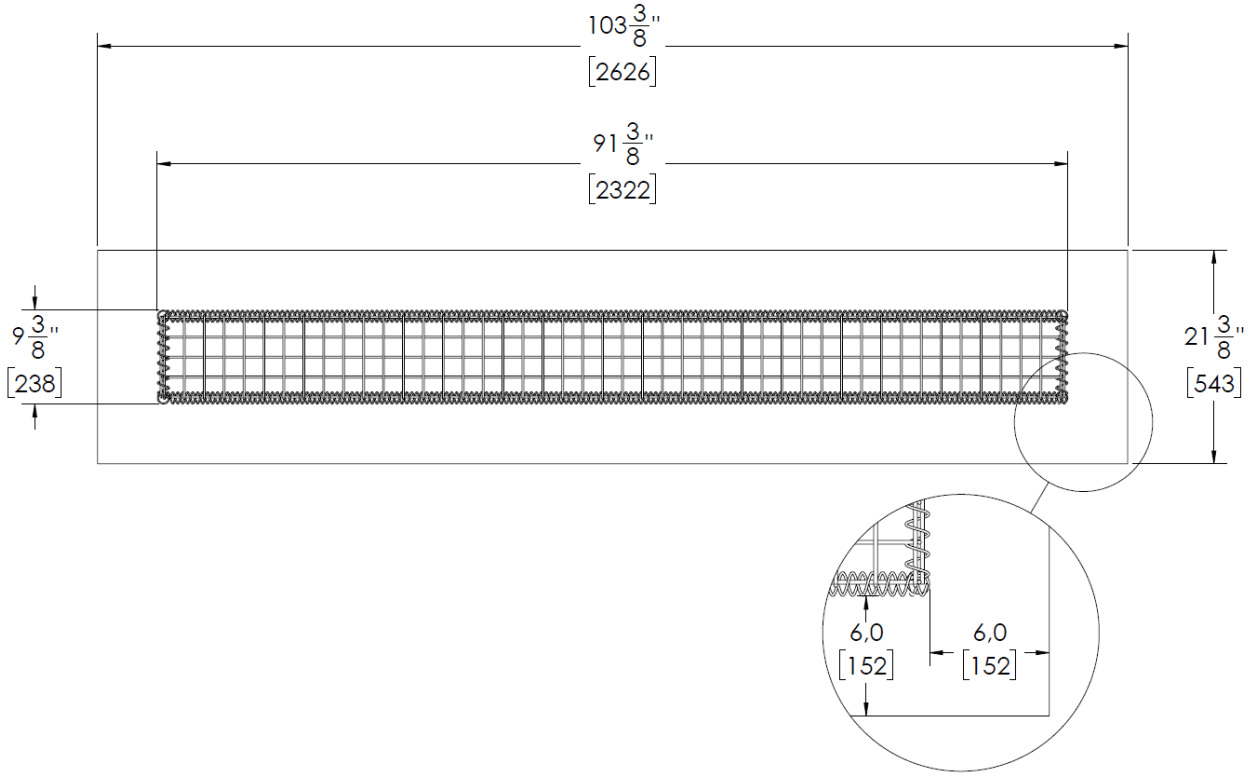

4 POURING CONCRETE

4.1 Pour the concrete into the pre-established zone

Concrete must be poured into the post holes for the post and over the entire marked ground area. Recommended minimum thickness for the gabion fence concrete base:
6 inches (152 mm).

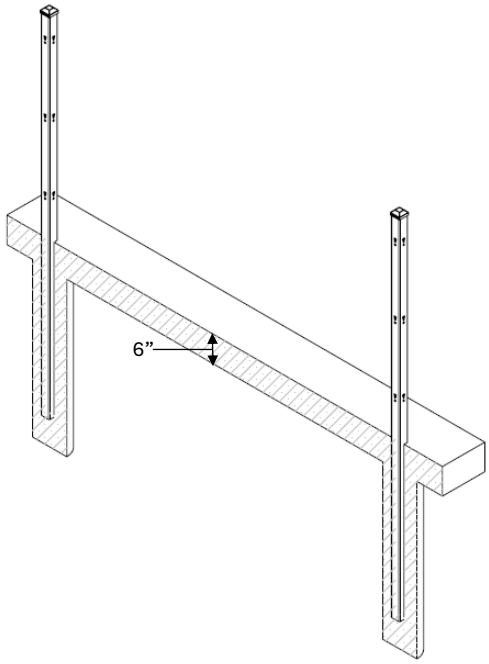

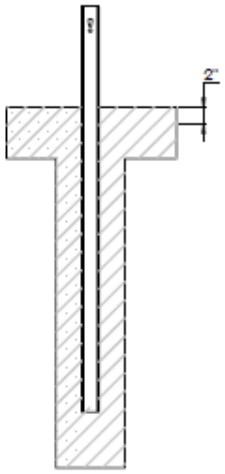

Note: Keep at least **2 in. (51 mm)** of concrete above ground level.

4.2 Let the concrete set before proceeding to the next steps

5 GABION PANELS ASSEMBLY

5.1 Bottom panel installation

Slide the bottom gabion panel between the 2 posts.

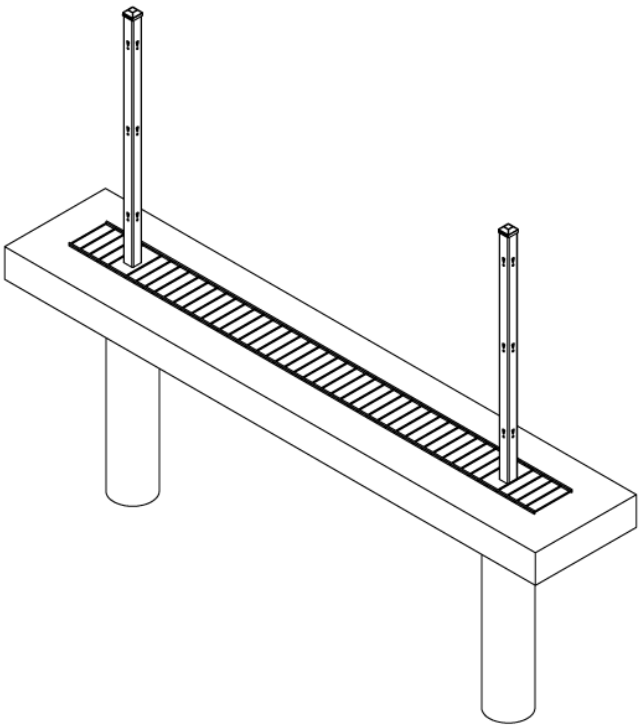

5.2 Lateral panels fixation to bottom panel

Cut the spindles at the desired length and connect the bottom panel to the face panel, back panel and the side panels using the spindles.

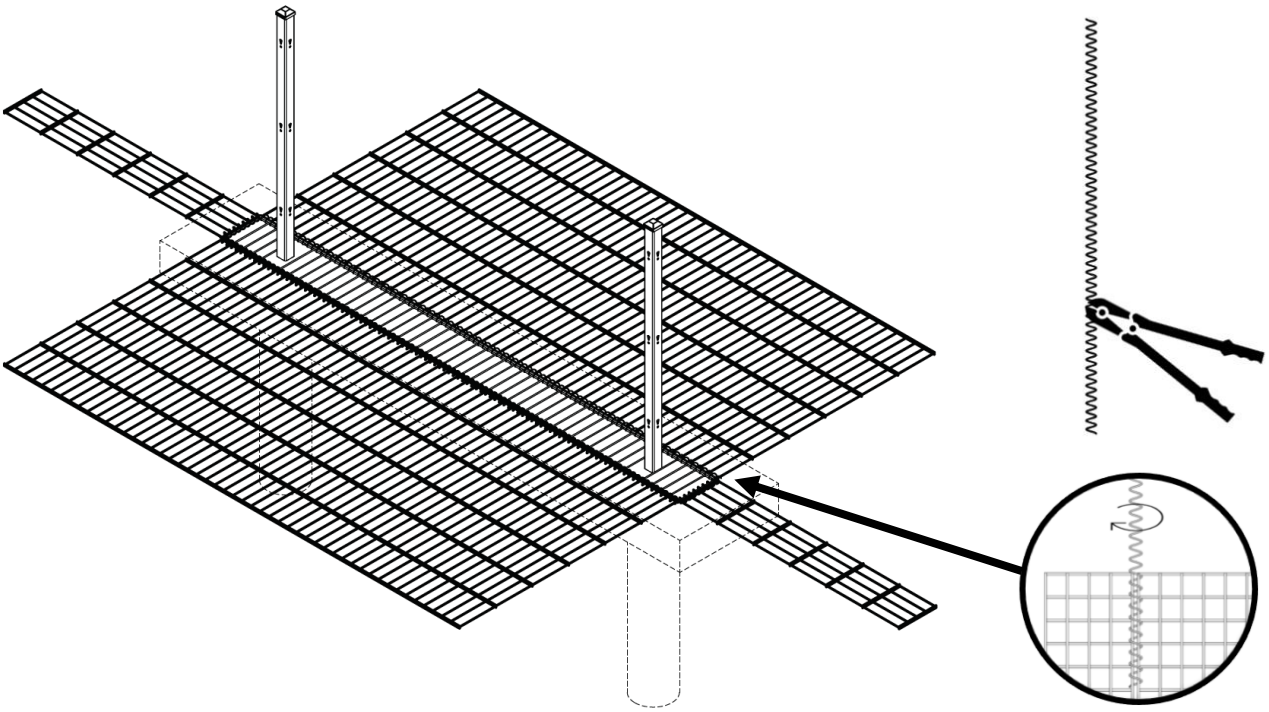

5.3 Lateral panels installation

Cut the spindles at the desired length and connect the lateral panels together using the spindles.

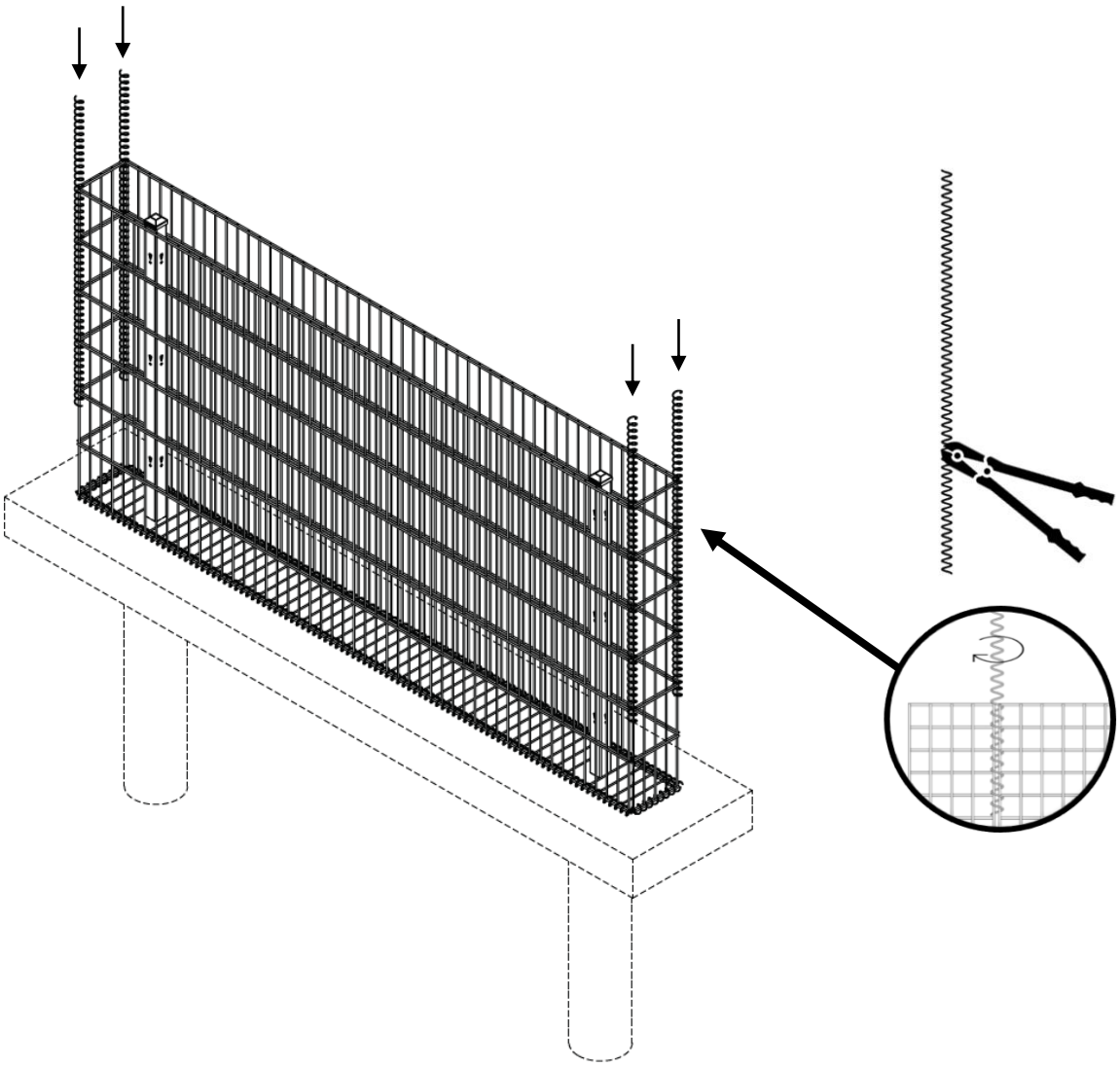

5.4 Hooks for post to panel installation

Secure the front and back panels to the posts with the provided 4” hooks, then secure the side panels to the posts with the provided 9” hooks.

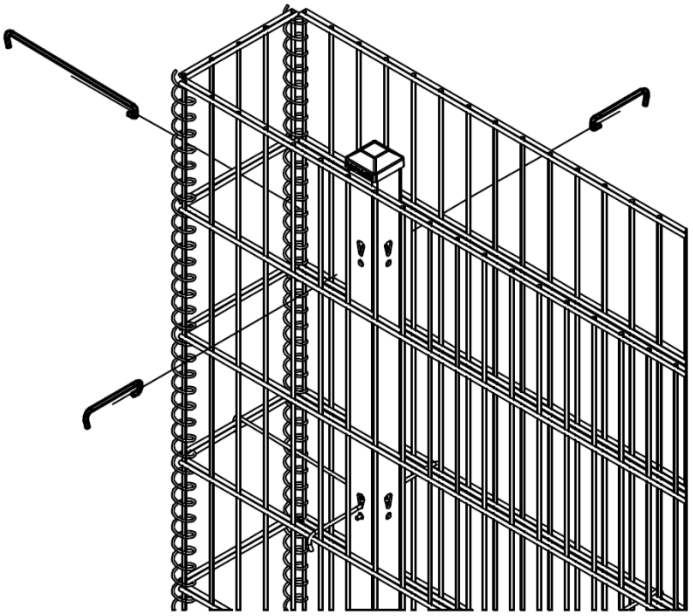

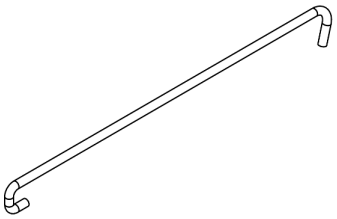

9’’ Hooks

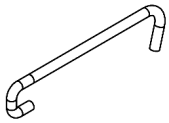

4’’ Hooks

Insert a hook at each pre-drilled post hole in form of “**!**”.



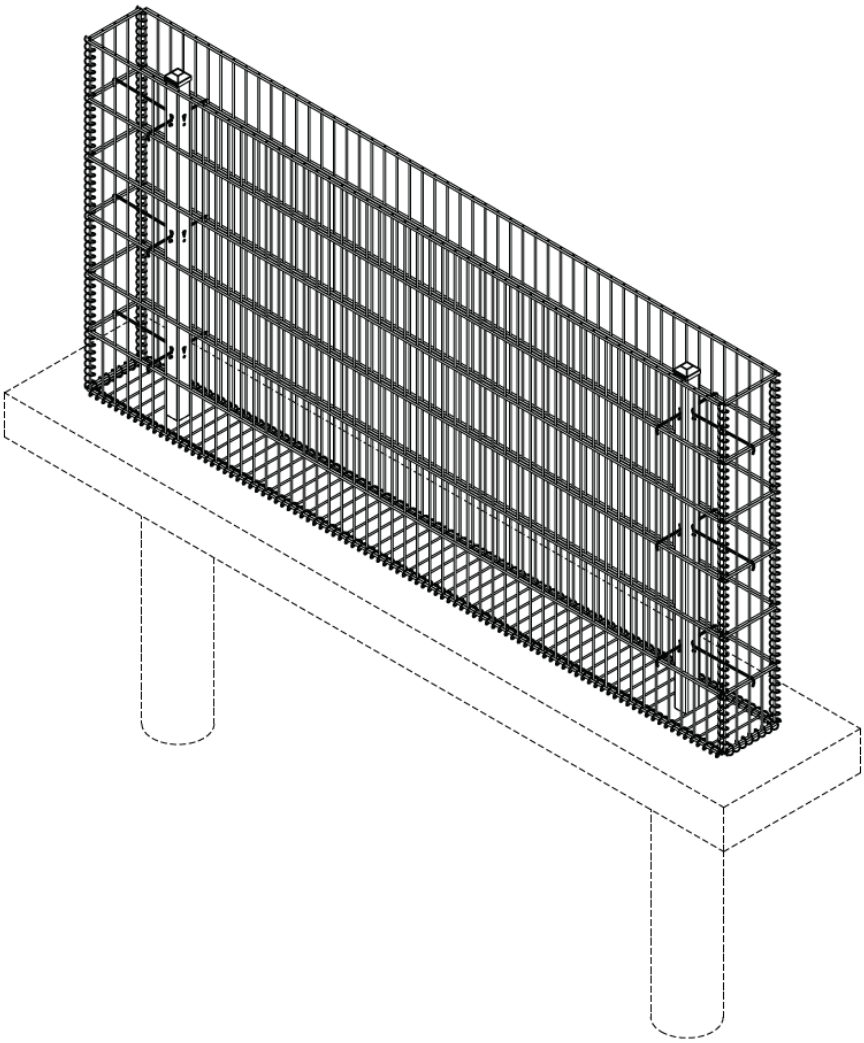

5.5 9" hooks for panel-to-panel installations

Install the first line of 9” hooks to connect the front panel to the back panel. Pack with infill up to that height. Repeat this process for each line of horizontal hooks until the last line of 9” hooks is installed and the infill packed up to the top. See ANNEX I for hooks disposition.

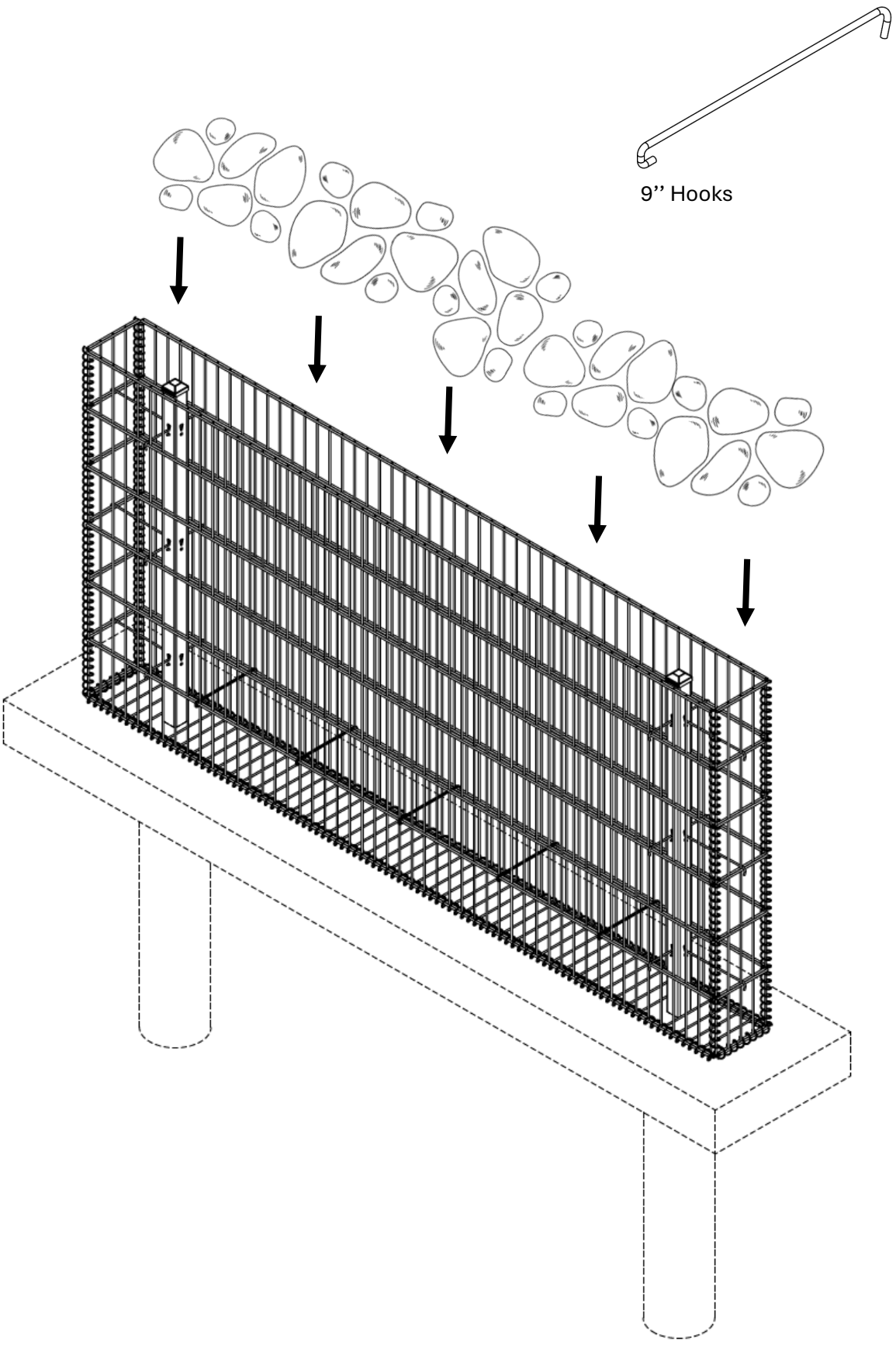

5.6 Closing the gabion fence

Cut the spindles at the desired length and connect the top panel to the lateral panels together using the spindles. The gabion fence is now assembled.

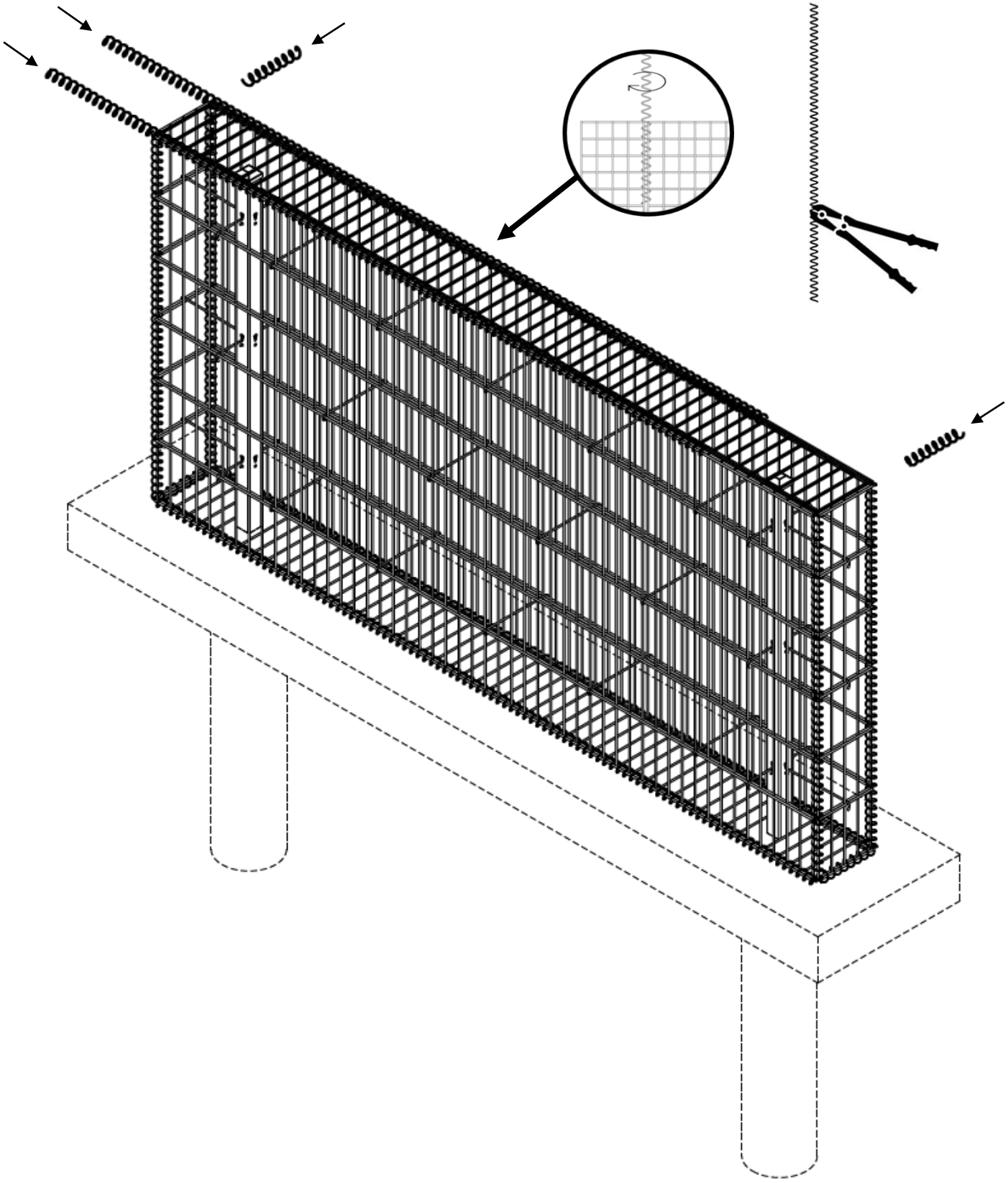

GABION FENCE – MULTIPLE GABION INSTALLATION GUIDE

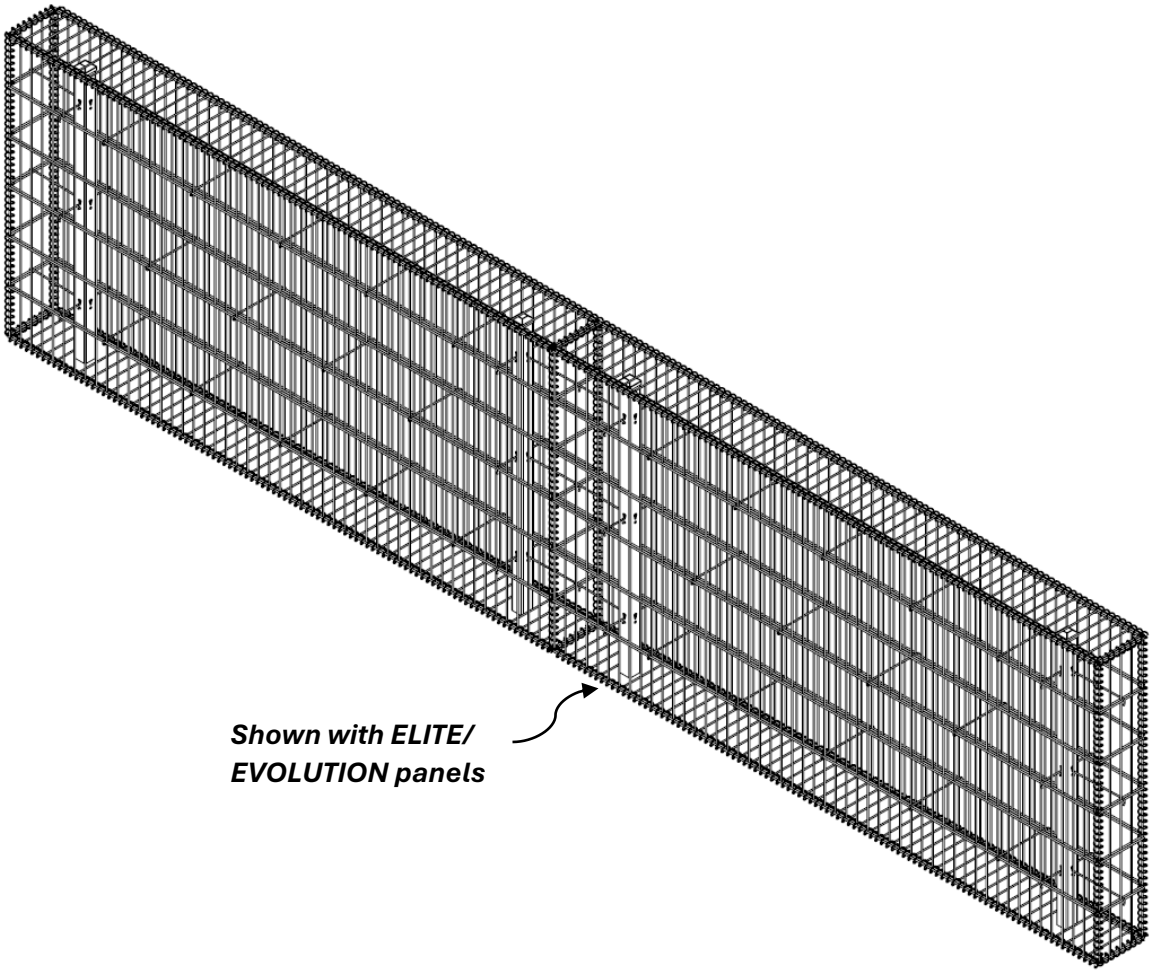

Shown with ELITE/ EVOLUTION panels

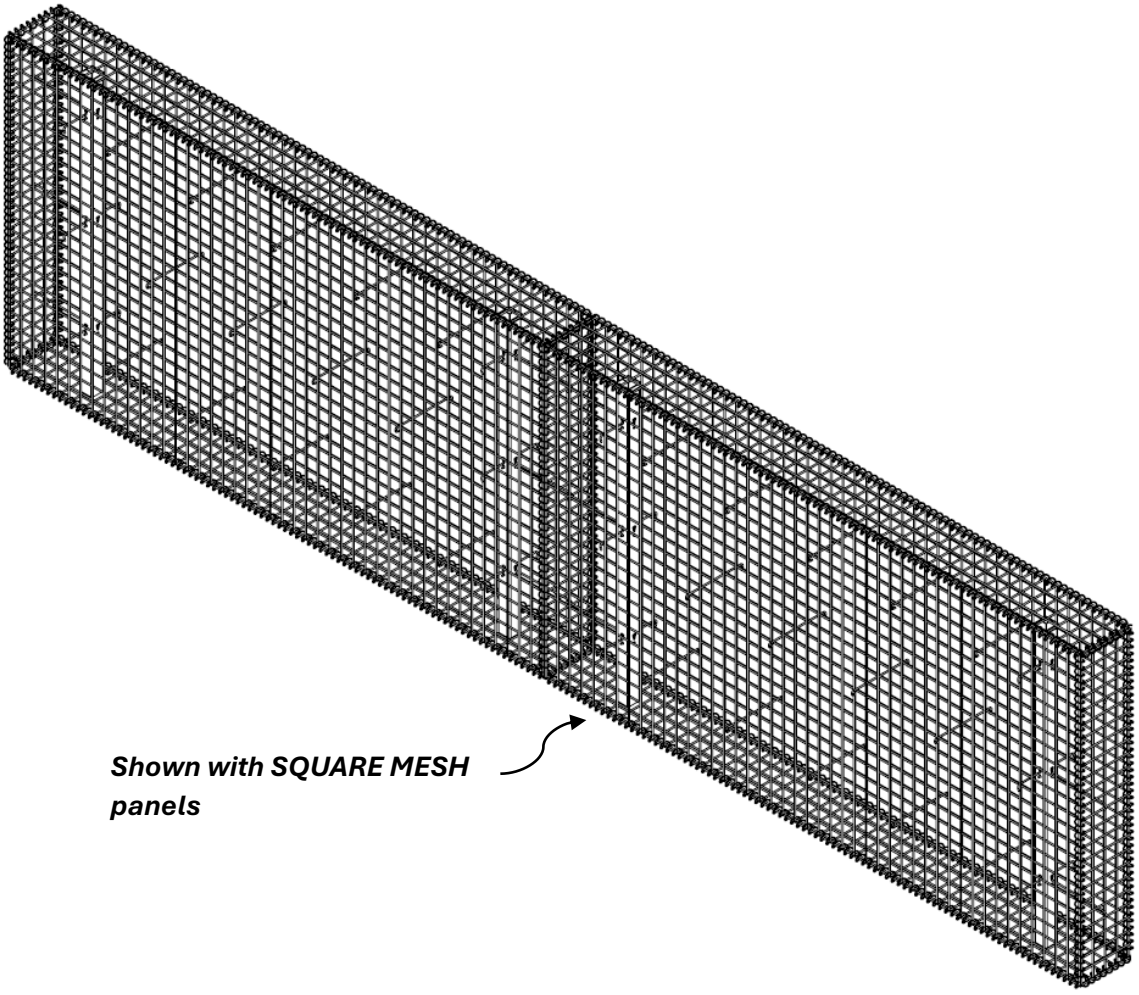

Shown with SQUARE MESH panels

1 GABION LINE FENCE KIT - INCLUDED ITEMS

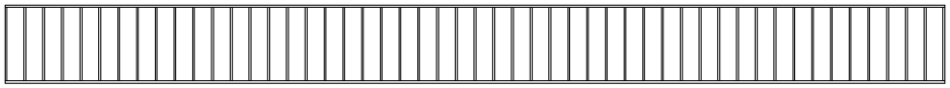

Top panel

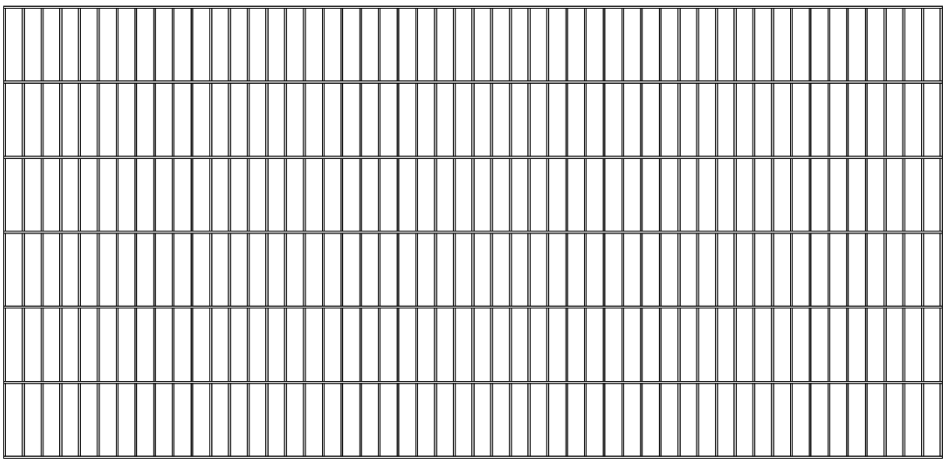

(2x) Front & back panels



(1x) Side panel



Bottom panel

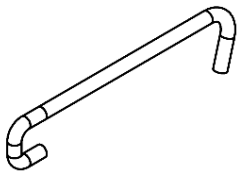

4'' Hooks

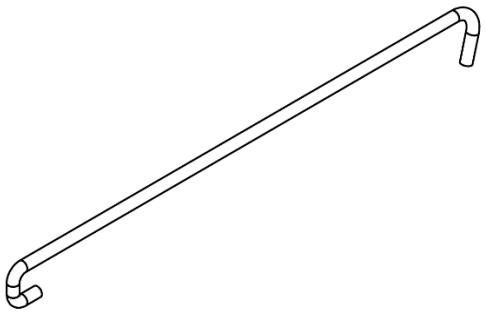

9'' Hooks



Spindles



(2x) Posts

Items quantities table

Gabion fence height	Product number	Gabion spindle (C-GSPINDLESS) quantity	4" hooks kit (C-GHK2PK9SS) quantity	9" hooks kit (C-GHKPPK9SS) quantity
4'	C-GFLEL48K**XX** C-GFLSQ48K**XX**	7	2	3
6'	C-GFLEL72K**XX** C-GFLSQ72K**XX**	8	3	4
8'	C-GFLEL96K**XX** C-GFLSQ96K**XX**	9	3	5

XX	Finish
BK	Black
SP	Special color
GV	Galvanized (EVOLUTION only)

2 POST INSTALLATION

2.1 Distance between posts

The distance between the lateral post and the middle post, measured from center to center (A), should be:

- **79 ⅝’’** ± ¼” (**2022 mm** ± 6 mm) for gabion fence with ELITE/EVOLUTION panels
- **70 ½’’** ± ¼” (**1791 mm** ± 6 mm) for gabion fence with SQUARE MESH panels

The distance between the middle posts, measured from center to center (B), should be:

- **19 $^{9}/_{16}$’’** ± ¼” (**497 mm** ± 6 mm) for gabion fence with ELITE/EVOLUTION panels
- **20’’** ± ¼” (**509 mm** ± 6 mm) for gabion fence with SQUARE MESH panels

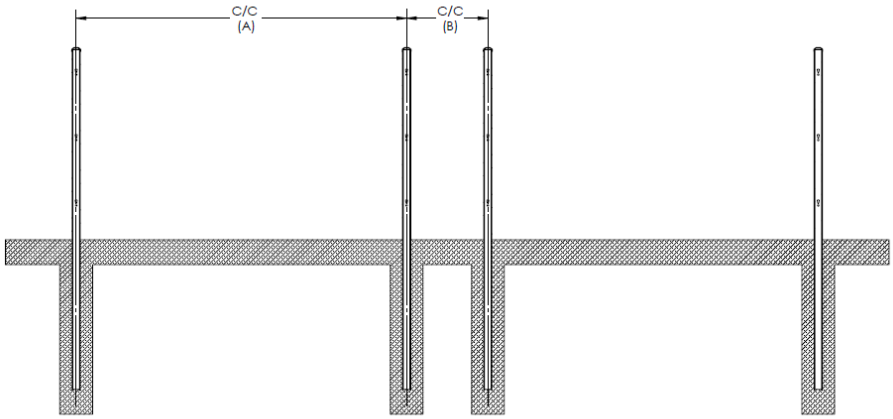

How to calculate the center to center for a non-standard width gabion fence:

Use the following formula to determine the center-to-center (C-C) distance between posts:

C-C = Gabion fence width – 2 × (9” hook length) – 2 × (post width ÷ 2)

Example:
Gabion fence width = 51"
C-C = 51 – 2 × (9 $\frac{11}{32}$”) – 2 × (2 ÷ 2) = **30 5/16"**

2.2 Posts installation in concrete

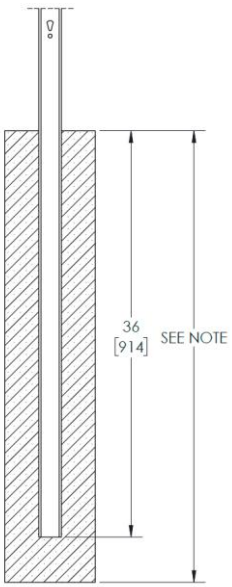

Posts must be embedded at a minimum depth of **3 feet (914 mm).**

NOTE:
The depth of the concrete foundations must comply with the regulations in effect in the region where the installation is performed. A **minimum depth of 42 in. (1070 mm)** is recommended. The recommended foundation diameter is **8 in. (200 mm)** for a commercial site and **6 in. (152 mm)** for a residential installation.

3 MARKING THE CONCRETE ZONE

3.1 Preparing the zone for post embedment

The concrete pad should extend across the entire base of the gabion and project an additional **6 in. (152 mm)** beyond the gabion on all sides. This ensures adequate structural stability and proper load distribution. **The same installation method applies when installing multiple gabions.**

3.1.1 ELITE/EVOLUTION gabion fence

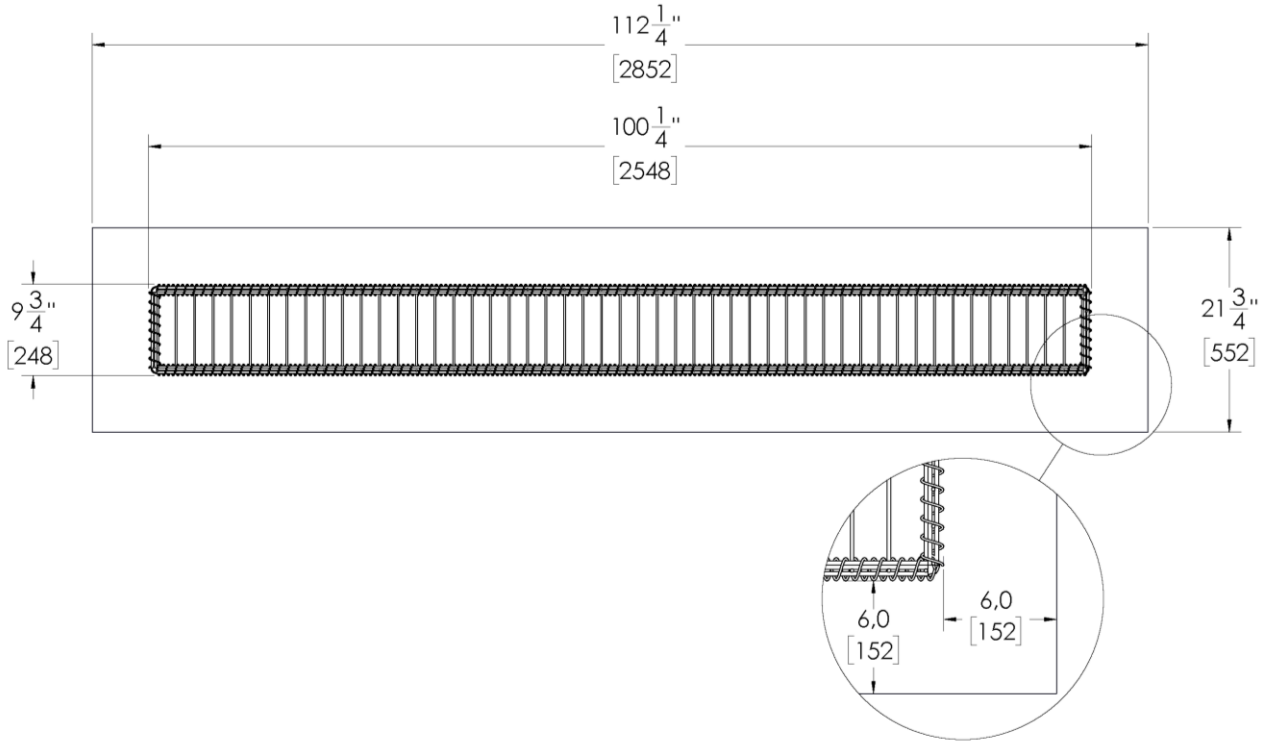

3.1.2 SQUARE MESH gabion fence

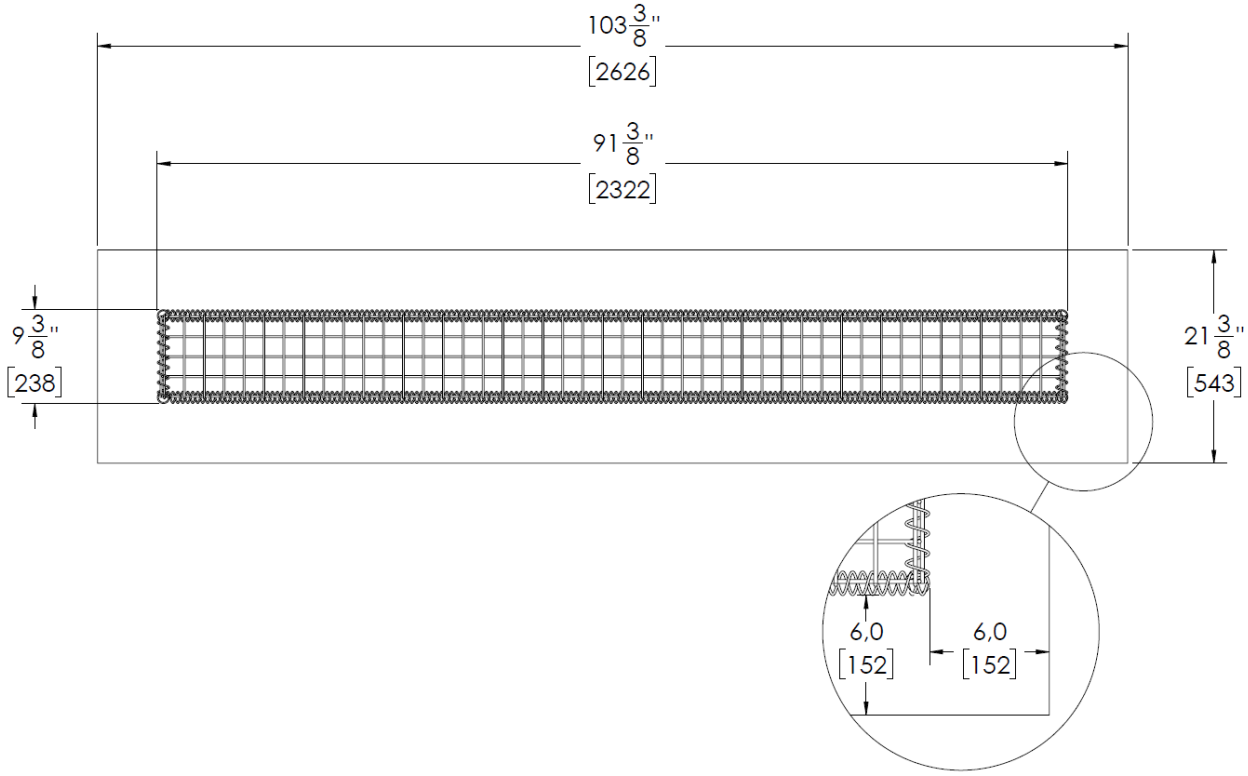

4 POURING CONCRETE

4.1 Pour the concrete into the pre-established zone

Concrete must be poured into the post holes for the post and over the entire marked ground area. Recommended minimum thickness for the gabion fence concrete base:
6 inches (152 mm). **The same installation method applies when installing multiple gabions.**

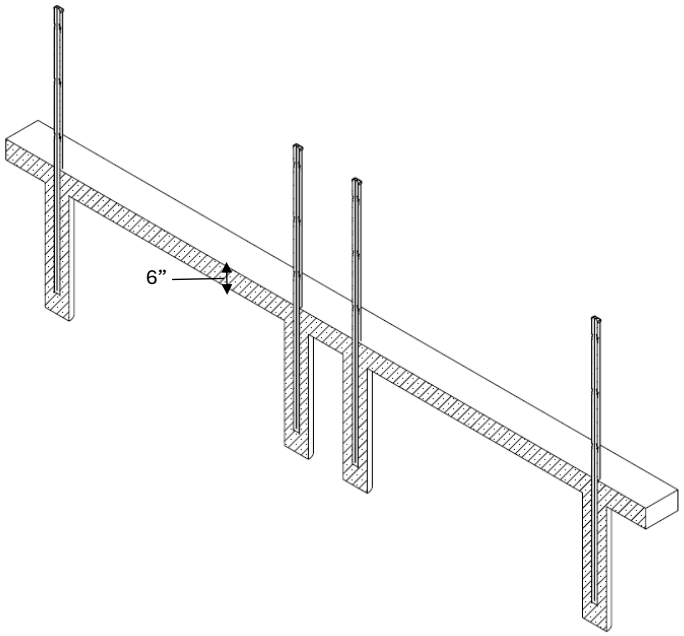

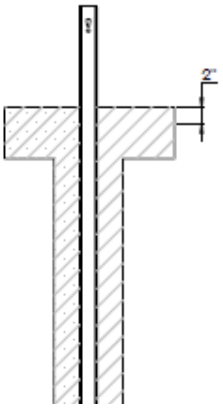

Note: Keep at least **2 in. (51 mm)** of concrete above ground level.

4.2 Let the concrete set before proceeding to the next steps

5 GABION PANELS ASSEMBLY

5.1 Bottom panel installation

Slide the bottom gabion panel between the 2 posts. Repeat the same procedure to install multiple gabions.

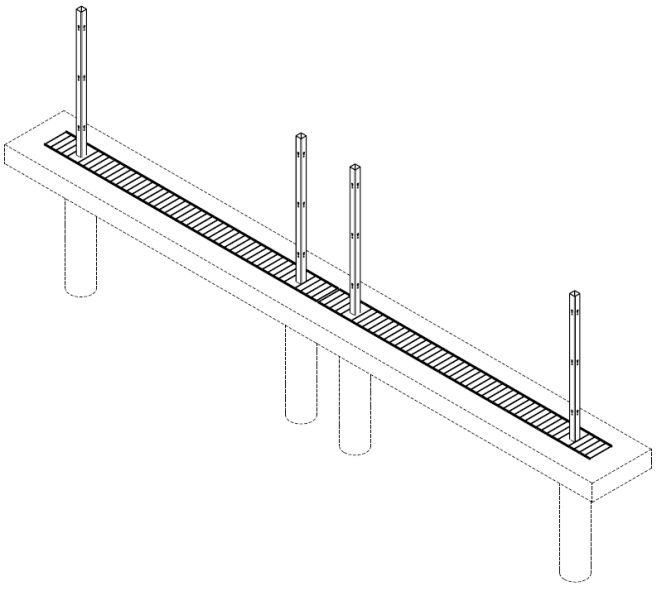

5.2 Lateral panels fixation to bottom panel

Cut the spindles to the required length and assemble the bottom panel, front panel, and back panel of the standard gabion. Install only the outer side panels. The center side panel is shared between the standard gabion and the adjacent gabion line unit. Repeat this procedure for each subsequent gabion line unit.

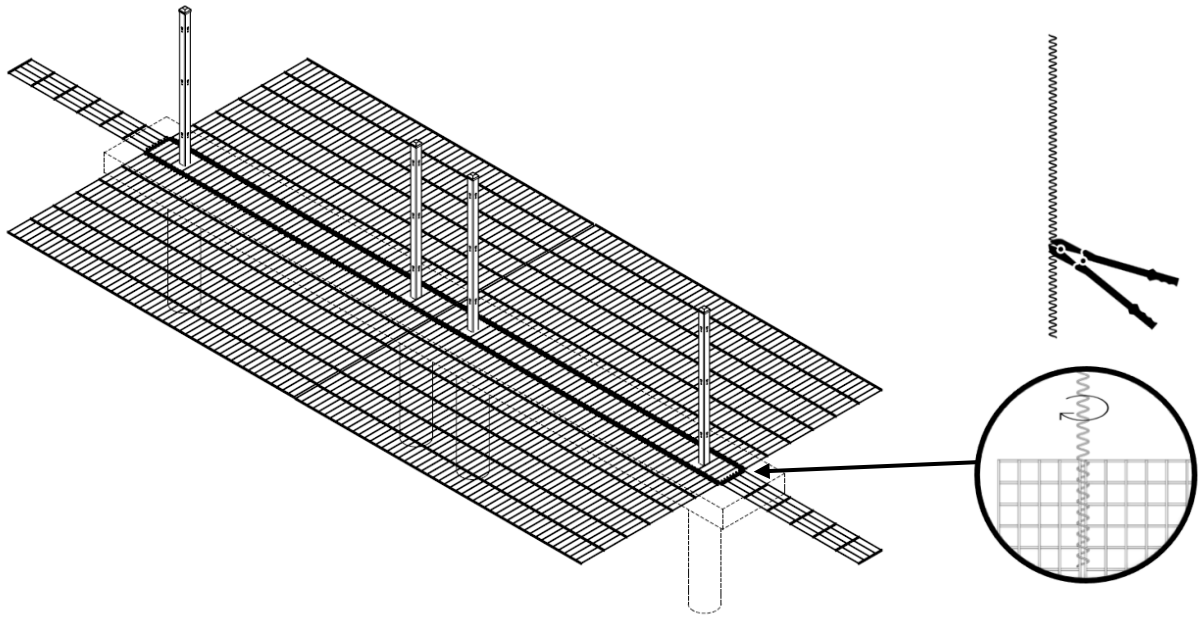

5.3 Gabion fence linking side panel installation

When installing multiple connected gabion fences, the first section must be a **standard gabion fence**, while all subsequent sections must be **gabion line fences**. The standard gabion fence shares one side panel with the adjacent gabion line fence. Cut the spindles to the required length, then install the bottom center spindle that connects the standard gabion fence to the gabion line fence.

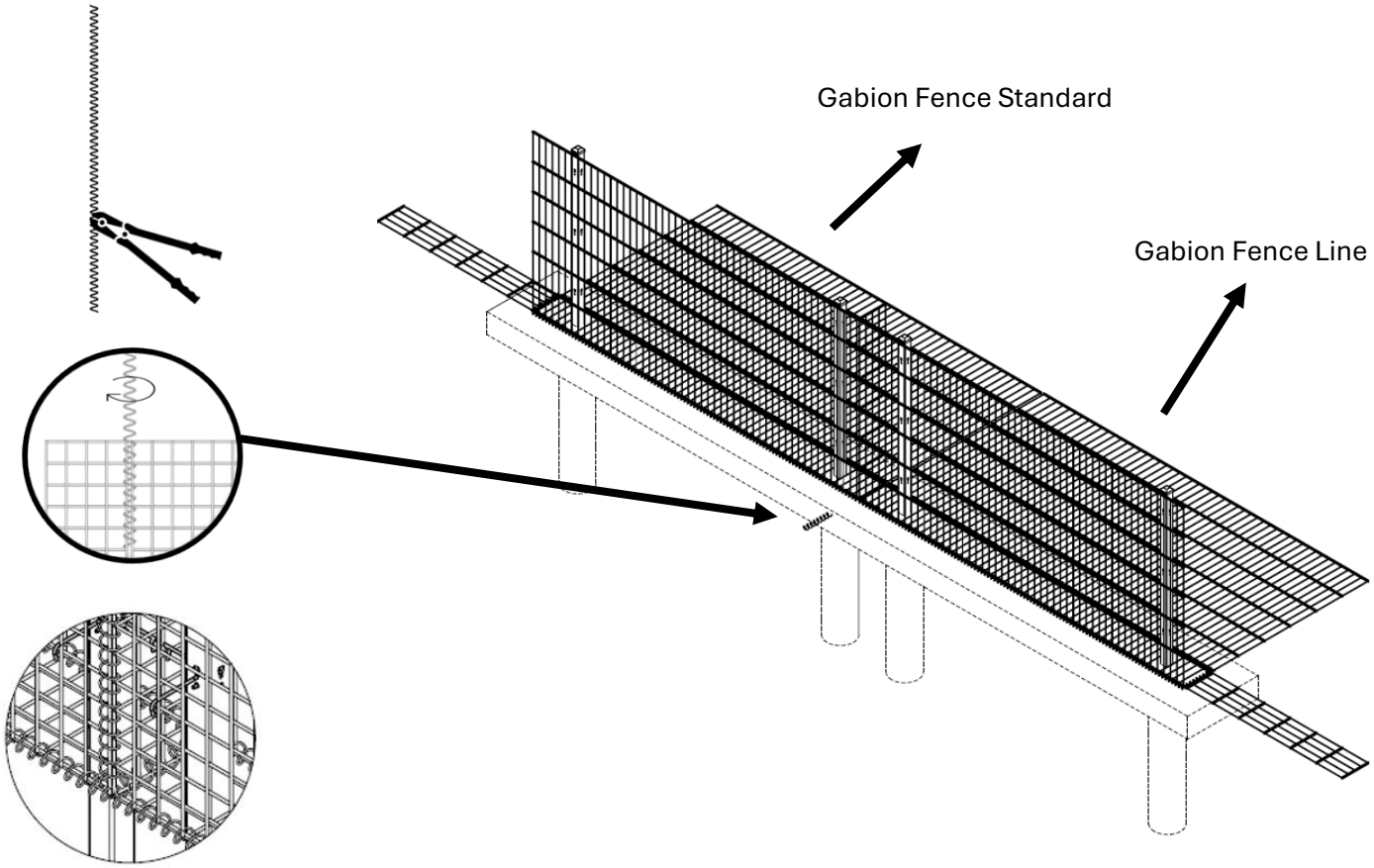

5.4 Gabion bench lateral panels installation

Cut the spindles to the required length and connect the front panels, back panels, and side panels together using the spindles.

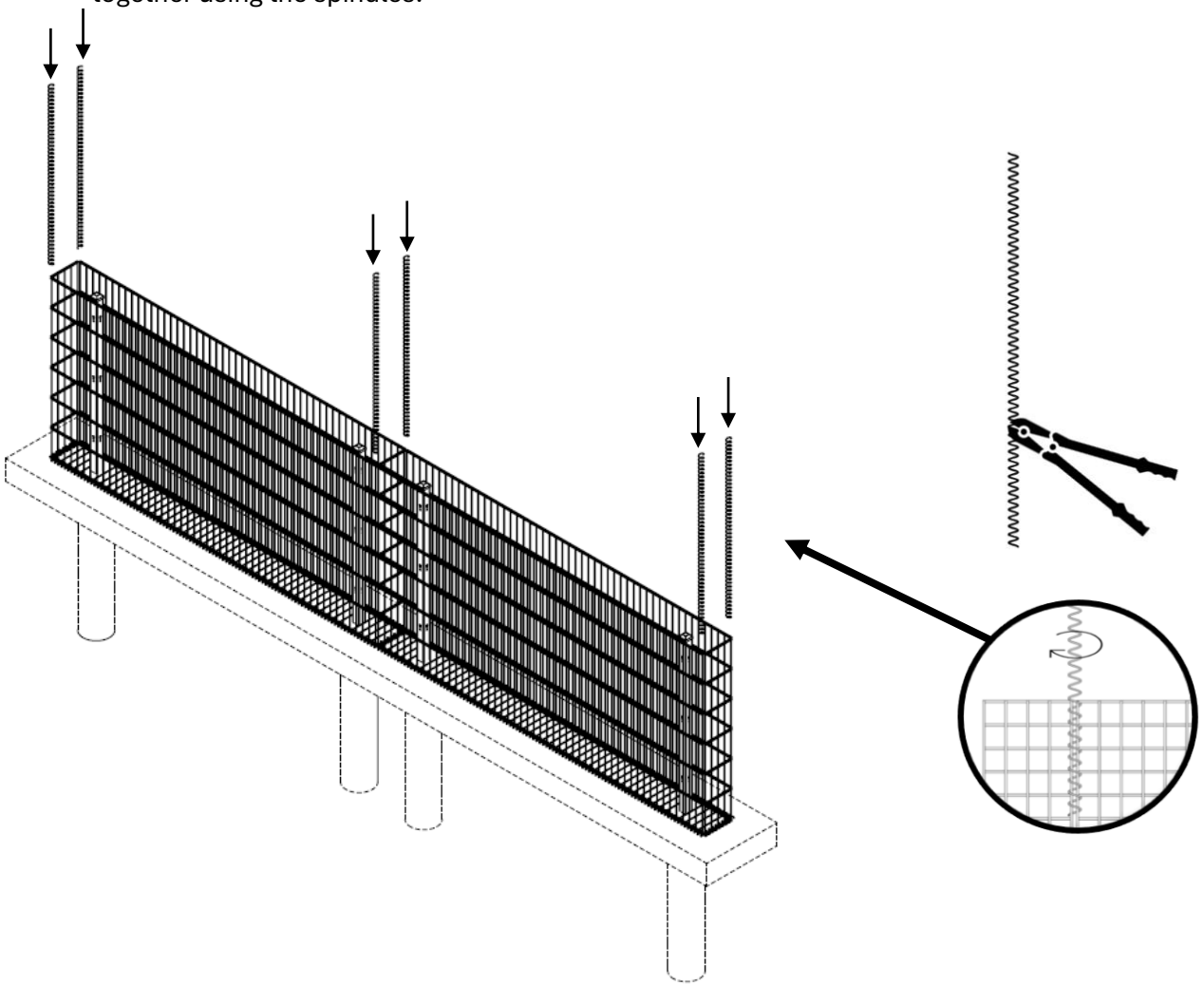

5.5 Hooks for post to panel installation

Secure the front and back panels to the posts using the supplied 4" hooks. Then secure the side panels to the posts using the supplied 9" hooks.

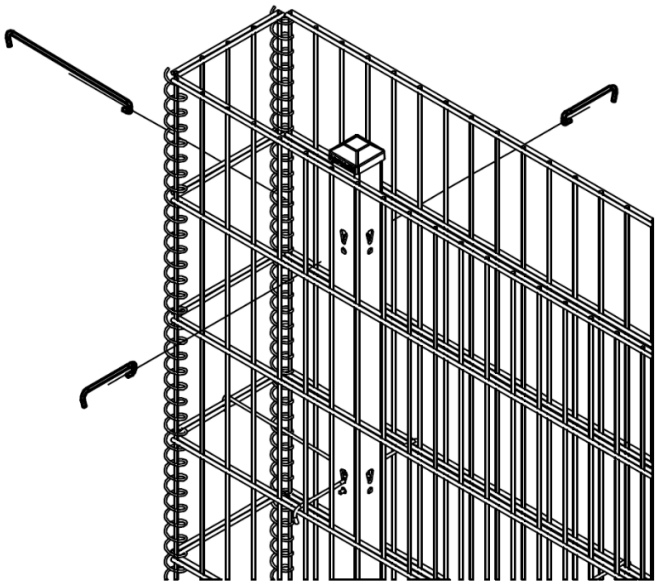

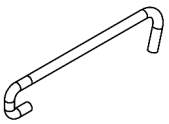

4'' Hooks

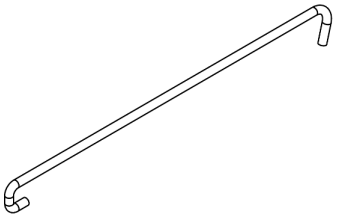

9'' Hooks



Insert a hook at each pre-drilled post hole in form of "**!**".

5.6 9" hooks for panel-to-panel installations

Install the first bottom row of 9" hooks to connect the front and back panels. Add and compact the infill material up to the height of the hooks. Repeat this process for each subsequent row until the final row of 9" hooks is installed and the gabion is filled to the top. Refer to **ANNEX I** for hooks placement.

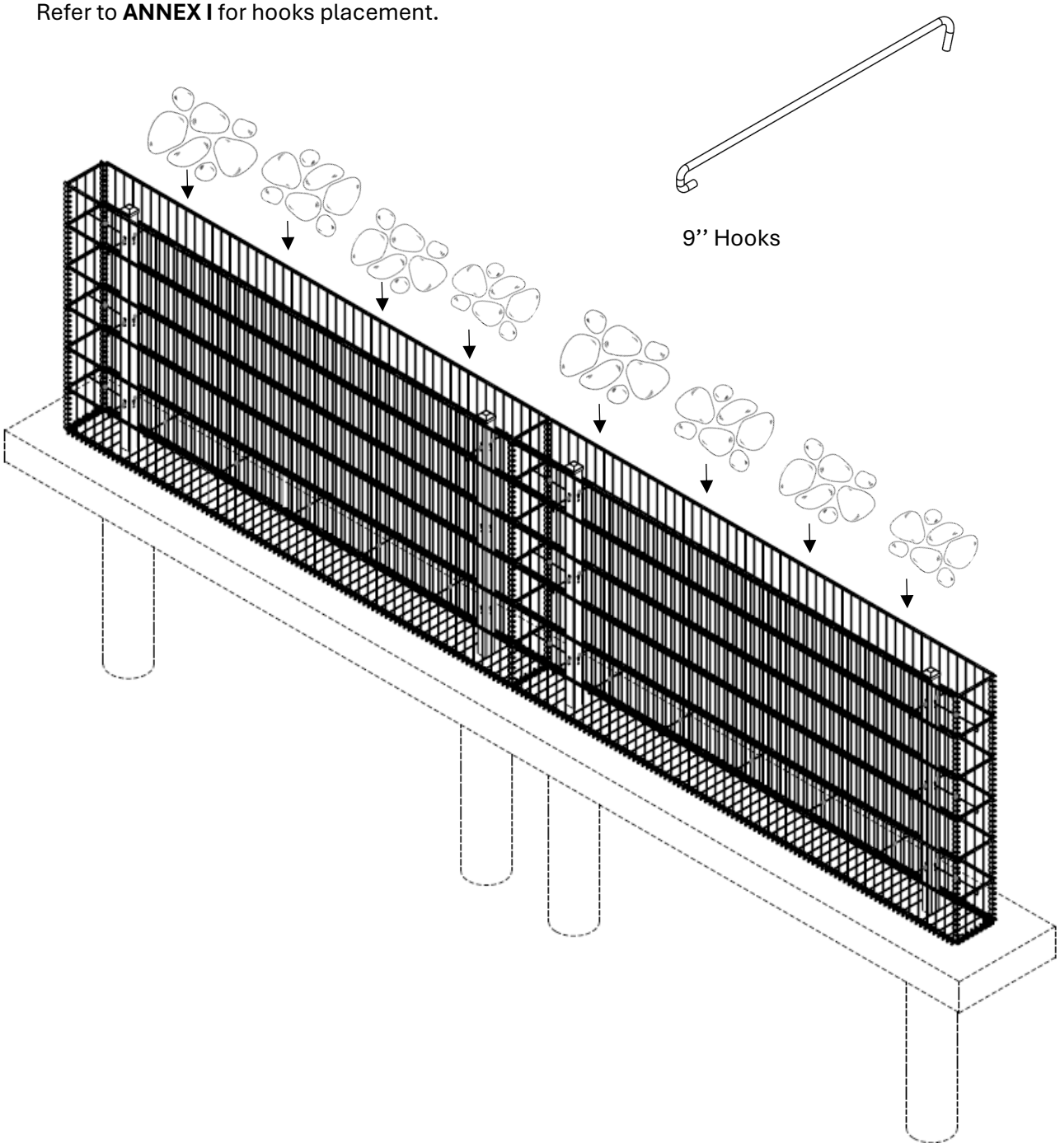

5.7 Closing the gabion fence

Cut the spindles at the desired length and connect the top panel to the lateral panels using the spindles. The gabion fence is now assembled.

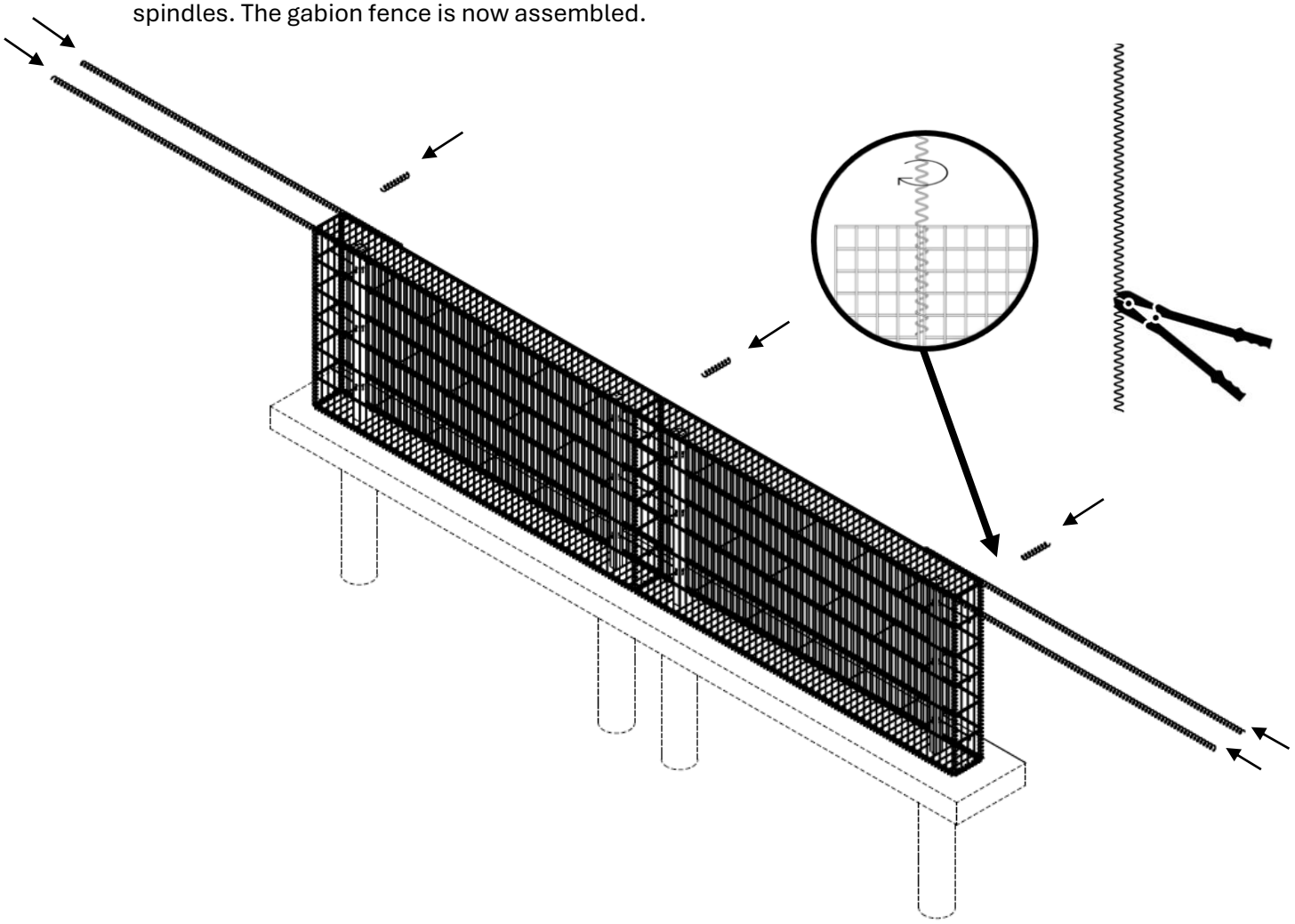

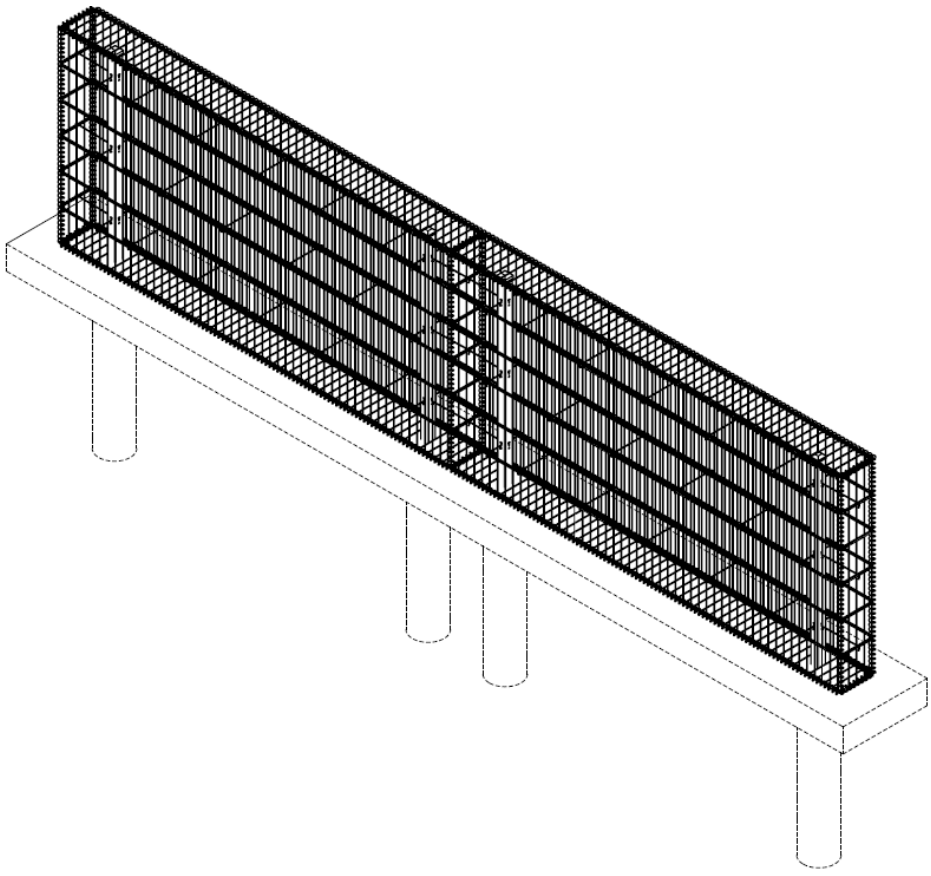

ANNEX I

Identify the internal hook placement depending on gabion type

4 feet high panel

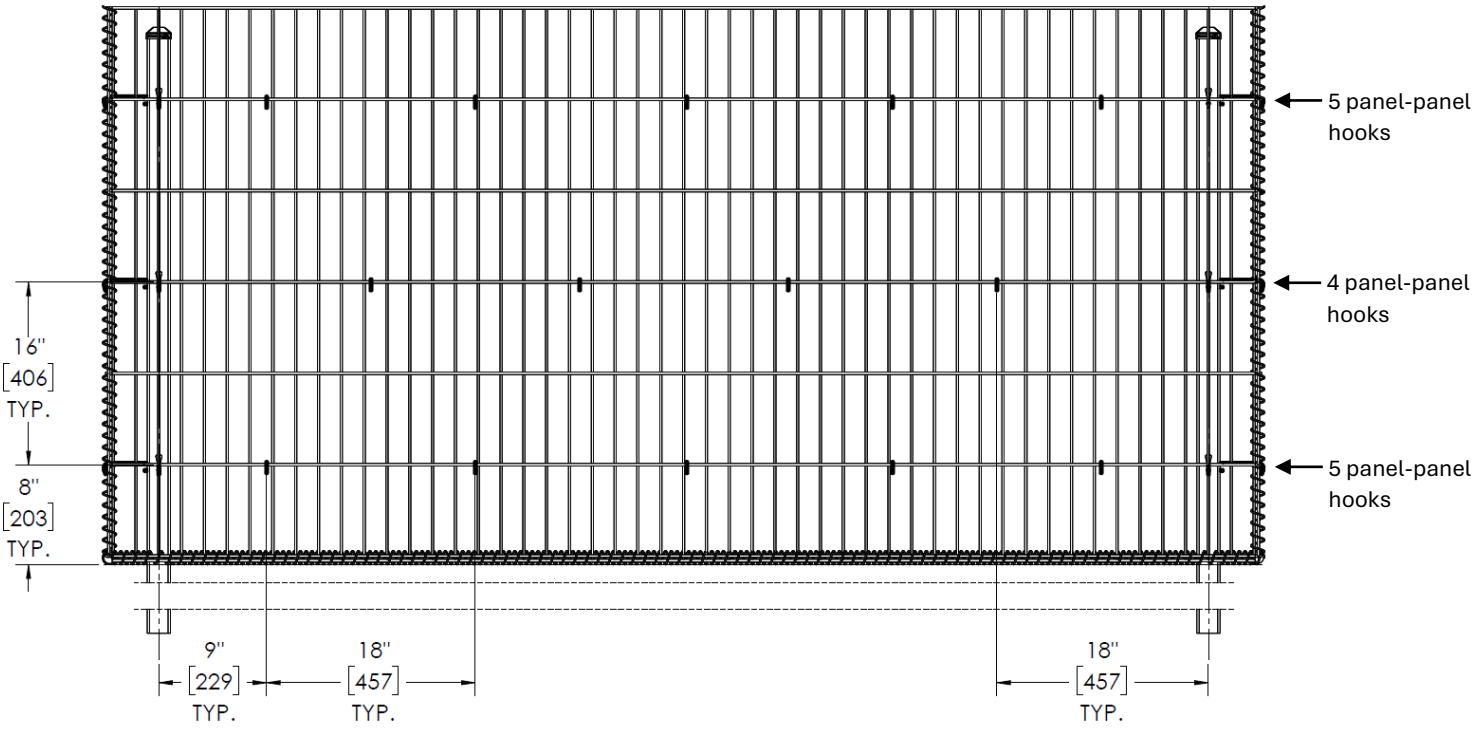

6 feet high panel

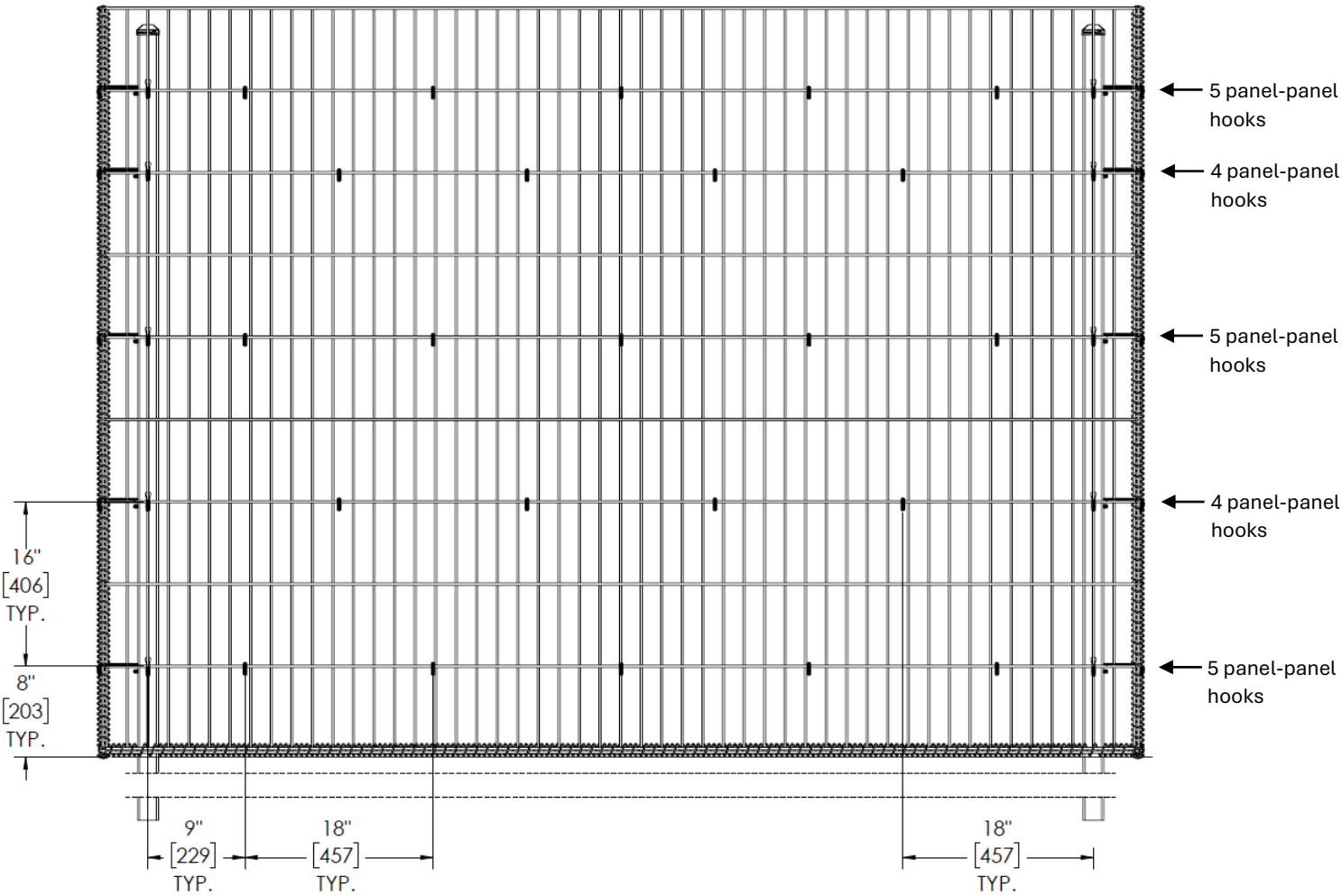

8 feet high panel

